Practical No.6

AIM:- Verify the operation of flip-flops(e.g D,JK) using logic gates in Logism .

2-Input NAND Gate

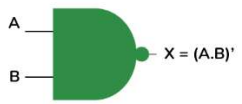

Truth Table

Input A	Input B	X = (A.B)'
0	0	1
0	1	1
1	0	1
1	1	0

2- Input NOR Gate

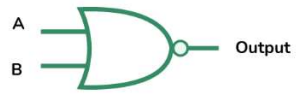

Truth Table

Input A	Input B	0 = (A + B)'
0	0	1
0	1	0
1	0	0
1	1	0

S-R Flipflops

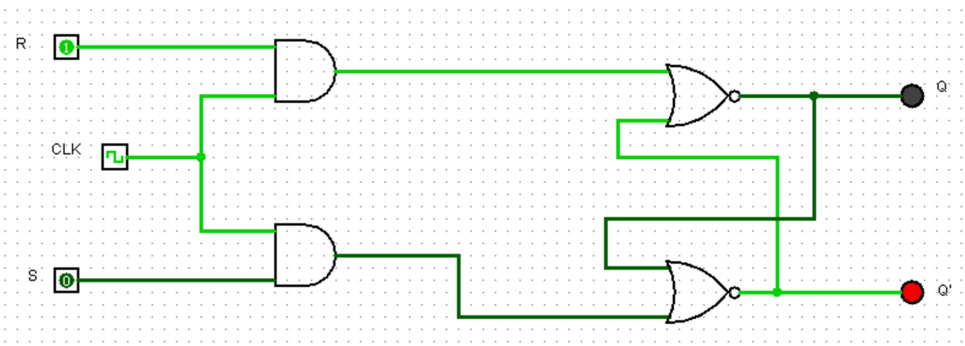

CLK	S	R	Q (Next)	Q' (Next)	Description
0	X	X	Q(hold state)	Q'(hold state)	No change (CLK=0)
1	0	0	Q(hold state)	Q'(hold state)	No change
1	0	1	0	1	Reset
1	1	0	1	0	Set
1	1	1	Undefined(Not applied)	Undefined(Not applied)	Invalid condition

X = Don't care (input doesn't matter when CLK = 0)

D flipflop:-

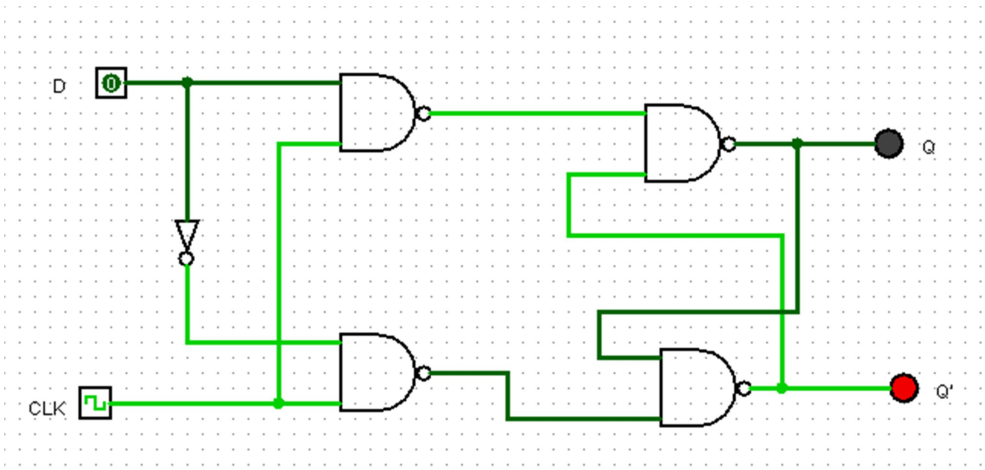

CLK	D	S	R	Q	Q’
1	0	O	1	O (Reset)	1
1	1	1	0	1 (Set)	0

JK FLIP FLOP:

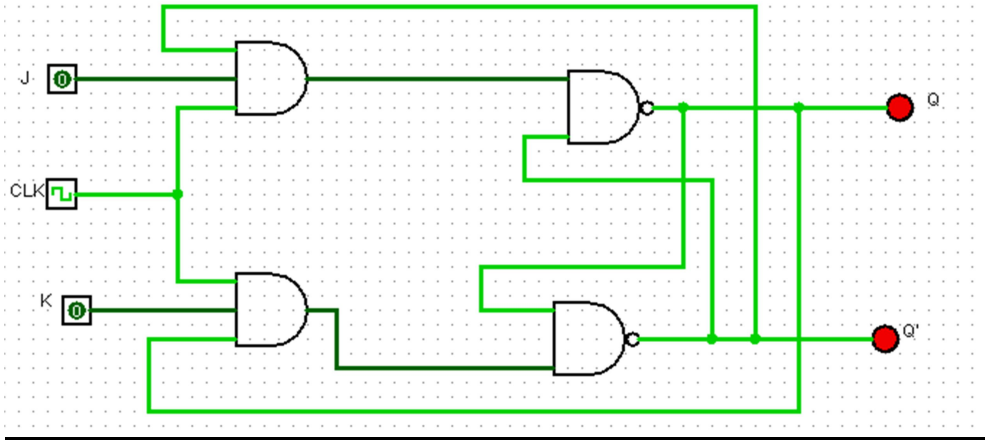

J(set)	K(reset)	Q(next complement	Q’(next complementation	Description
0	0	Q	Q’	No change
0	1	0	1	Reset(Q=0)
1	0	1	0	Set (Q=1)
1	1	Toggle(Q’)	Toggle(Q)	Toggle(Q switches)